28-Sep-24

To

M/s. REEDISHA KNITEX LIMITED,
GAZIPUR,
BANGLADESH.

Our Ref: Techno Commercial Proposal for Filtration Plant.

[Proposal No: 28.Sep.2024/WTT-0821/BAN/NP-FP/7.2M/R0/TCP].

Dear Sir,

WTT International Private Limited (WTT) is pleased to provide M/s. REEDISHA KNITEX LIMITED with the offer for supply of engineering & materials for Filtration Plant of capacity 7200 M^3/Day. In developing this offer WTT worked with you in an effort to understand your project and business needs. The attached proposal outlines the solutions we feel will best meet these objectives.

We greatly appreciate your consideration of WTT for this project. Our measure of success is how well we deliver solutions that help our client to meet their critical business objectives. We hope to have the opportunity to demonstrate this with your good selves.

Yours Sincerely,

D. Venkatesh
Managing Director

Proposal for:

1) Filtration Plant of capacity 7200 M^3/Day.

Proposal No: 28.Sep.2024/WTT-0821/BAN/NP-FP/7.2M/R0/TCP

S.NO	DESCRIPTION	DATE	PREPARED	APPROVED
1.	Techno Commercial Proposal – "Filtration Plant".	28-Sep-24	SA - GET AR - AGM	DV - MD

CONFIDENTIALITY

All details, specifications, drawings, images, and all other information submitted by us are only intended to the person/organization to which it is addressed and contains proprietary, confidential and or privileged material. Any review, retransmission, dissemination, or other use of, or of taking action in reliance upon this information by person or entities other than the intended recipient is prohibited. All or part information contained in the document is solely intended to the person or entity addresses and sharing this document in part or in whole is prohibited.

WE FEEL DELIGHTED TO PRESENT OUR PATENTED SYSTEMS

Award For Excellence in Water Management

CII (Confederation of Indian Industry) *awarded*
WTT International *with the prestigious*

"Excellence in Water Management Award"

recognizing the advanced water treatment technologies
innovated by ***WTT International***
As a part of Industrial Water / Waste Management competition 2023

CONTENT

1. TECHNICAL AND ENGINEERING DETAILS 6
1.1. BASIS OF DESIGN 6
1.2. INFLUENT QUALITY 6
1.3. INFLUENT FLOW DATA 7
1.4. OPERATIONAL BASIS 7
1.5. PROCESS COMPATIBILITY 7
2. DESIGN SYSTEM CHOSEN 8
2.1. EXPECTED TREATED WATER QUALITY 9
3. EQUIPMENT DETAILS FOR PROPOSED SYSTEMS 10
3.1. SUBMERGED CERAMIC MBR SYSTEM 10
3.2. CONTAMINANT REMOVAL SYSTEM 11
3.3. DEGASSER TOWER SYSTEM 11
3.4. REVERSE OSMOSIS SYSTEM 12
4. EQUIPMENT SCOPE OF SUPPLY – BY WTT 12
5. SCOPE OF SUPPLY & INSTALLATION - BY CLIENT 16
6. TYPICAL EQUIPMENT VENDOR LIST 19
7. PRICING DETAIL 20
8. HAPPY CUSTOMERS 21
9. CHANNEL PARTNERS 21
10. PROCESS DESCRIPTION VIDEO 21
11. COMMERCIAL TERMS AND CONDITIONS 22
11.1. TAXES 22
11.2. FREIGHT 22
11.3. INVOICING AND PAYMENT TERMS 22
11.4. EQUIPMENT SHIPMENT 22
11.5. FORCE MAJEURE 23
11.6. PRICING NOTES 23
12. CLIENT SCOPE OF SUPPLY 23
12.1. SAFETY AND ENVIRONMENTAL 23

12.2. JOBSITE AND INSTALLATION REVIEW 24
12.3. START-UP AND COMMISSIONING 25
12.4. FACILITY MANAGEMENT 26
12.5. CONDITIONAL OFFERING 26
13. APPENDIX 27
13.1. APPENDIX A: CLARIFICATIONS 27
13.2. APPENDIX B: ACCEPTANCE 27
13.3. APPENDIX C: WARRANTY 28

1. Technical And Engineering Details

1.1. Basis of Design

- ✓ *Submerged Ceramic MBR system proposed to reduce Fouling Potential of RO feed water*
- ✓ *Contaminants removal system proposed to remove slowly Bio-degradable compounds present in the Effluent water*
- ✓ *Degasser tower proposed to reduce alkalinity/bicarbonate by stripping CO_2 from effluent water*
- ✓ *Reverse Osmosis System proposed to achieve recovery of **94% in 4 Stages** with **Single Skid***

The following sections summarize the treatment processes, the major system components, the main system design parameters and design outputs as well as design details of system components. This section does not define scope of supply. Scope delineation is covered under section 3.

1.2. Influent Quality

S.NO	PARAMETER	UNIT	FILTRATION PLANT INLET
1.	pH	--	7 – 8
2.	BOD	mg/L	30
3.	COD	mg/L	100
4.	TDS	mg/L	2300
5.	TSS	mg/L	25
6.	REACTIVE SILICA *	mg/L	15
7.	TKN *	mg/L	NIL
8.	IRON *	mg/L	NIL
9.	SULPHATE	mg/L	< 383
10.	CHLORIDE	mg/L	< 56

11.	HARDNESS *	mg/L as $CaCO_3$	< 250
12.	ALKALINITY *	mg/L as $CaCO_3$	< 1000
13.	TEMPERATURE	ºC	< 38
14.	OIL & GREASE	mg/L	NIL
15.	OTHER HEAVY METALS	mg/L	NIL

*Since the *Parametrical values are not available, it has been considered for the purpose of designing the treatment system. Any change in these values will impact design & cost of the Filtration Plant.*

The design solution proposed is based on the values as presented in the table above at Filtration Plant inlet. All concentrations refer to max concentrations to be used for the system's design. **Any change in the actual inlet parameters will have impact on Process Design, Engineering Design, Cost and Performance.**

1.3. INFLUENT FLOW DATA

PARAMETER	VALUE	UNIT
FILTRATION PLANT FEED FLOWRATE	7200	M^3/DAY

1.4. OPERATIONAL BASIS

Hours Per Day of Operation	24
Days Per Year of Operation	350 days (Downtime for chemical cleaning and other regular annual maintenance work 15 days considered)

1.5. PROCESS COMPATIBILITY

1. The incoming raw wastewater shall not contain any substance incompatible with the MOC of the Equipment supplied & inhibitory substances that sufficiently affect the biological treatment stage so as to compromise the operation of any of the system.

2. Design System Chosen

S.NO	PROCESS	CAPACITY (M^3/DAY)
1.	SUBMERGED CERAMIC MBR SYSTEM	7200
2.	CONTAMINANTS REMOVAL SYSTEM	720
3.	DEGASSER TOWER SYSTEM	2298
4.	REVERSE OSMOSIS SYSTEM **(94% RECOVERY IN 4 STAGES WITH SINGLE SKID)**	2298

***System capacities mentioned above are based on Filtration Plant influent flow Rate and the Actual capacities may vary.**

PROPOSED WATER BALANCE

FILTRATION PLANT FOR 7200 M³/DAY @ 2300 TDS

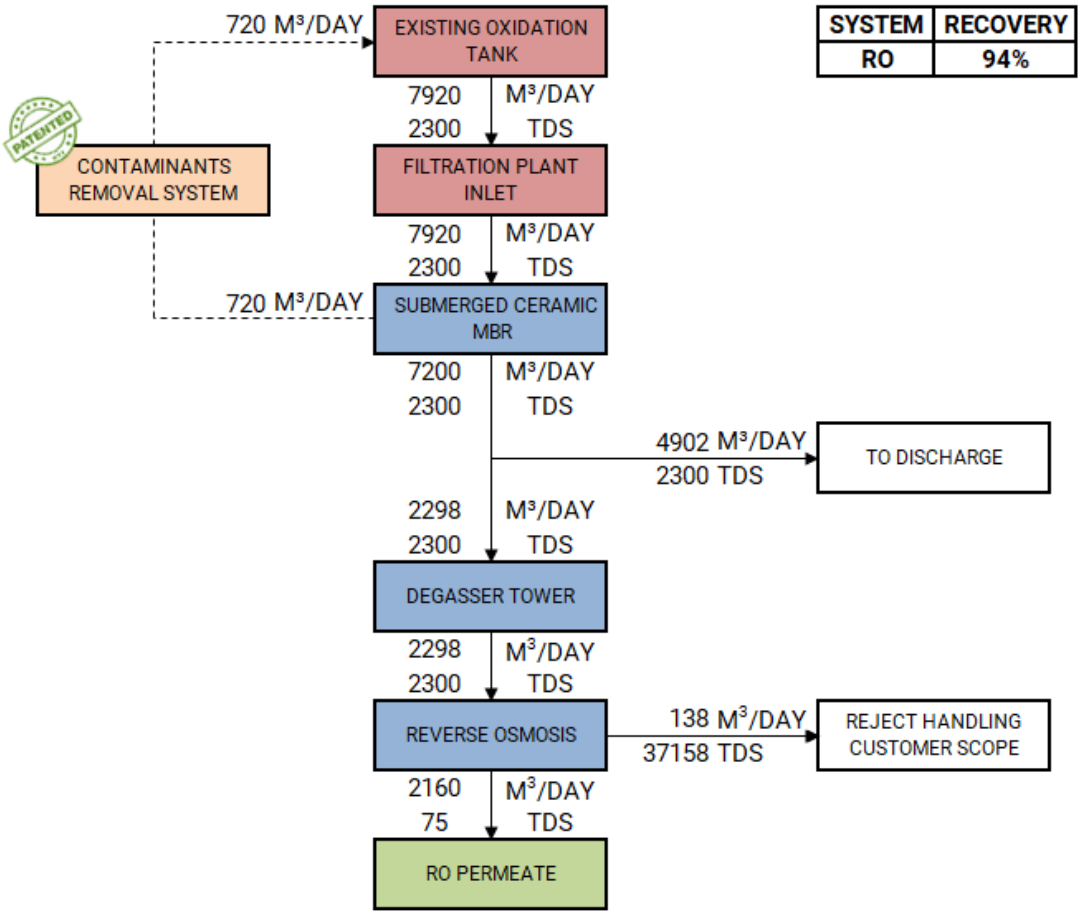

FILTRATION PLANT – STAGEWISE PARAMETERS				
PARAMETER	UNIT	FILTRATION PLANT INLET	REVERSE OSMOSIS @ 94% RECOVERY	
			PERMEATE	REJECT
pH	--	7 – 8	6 – 7	6 – 7
BOD	mg/L	30	BDL*	< 500 *
COD	mg/L	100	BDL*	< 1670 *
TDS	mg/L	2300	< 100	36000 – 38500
TSS	mg/L	25	BDL	NA
REACTIVE SILICA	mg/L	15	< 1	< 275
TKN	mg/L	NIL	NIL	NIL
IRON	mg/L	NIL	NIL	NIL
SULPHATE	mg/L	< 383	< 40	5500 – 7500
CHLORIDE	mg/L	< 56	< 30	500 – 1500
HARDNESS	mg/L as $CaCO_3$	< 250	< 1	3800 – 4800
ALKALINITY	mg/L as $CaCO_3$	< 1000	< 20	2000 – 3000
TEMPERATURE	ºC	< 38	30 – 35	30 – 35
OIL & GREASE	mg/L	NIL	NIL	NIL
OTHER HEAVY METALS	mg/L	NIL	NIL	NIL

BDL – below detectable limit, NA – not applicable; Values are system generated which may vary with variation in inlet & on operational basis

*** Based on the available form of solubility.**

2.1. EXPECTED TREATED WATER QUALITY

The following performance parameters are expected under standard operating conditions after equipment start-up based on the data and assumptions listed above and in Appendix, Warranties. In case of conflicting numbers, the ones listed under Appendix take precedence:

PARAMETER	TREATED WATER QUALITY	UNIT
RO Permeate Water TDS	75 – 100	mg/L

Notes:

- All influent quality parameters are based on daily average values of a minimum of four (4) Nos. of hourly composite samples collected at regular intervals over a day, with testing performed to applicable industry-approved standards.
- The treated water parameters could take 6 months for attaining specified values as per above table after successful commissioning.
- The above recovery water quality expectation is based on WTT supplying the system and scope Equipment as per the scope of supply table described in section 3 below.

3. Equipment Details for Proposed Systems

3.1. Submerged Ceramic MBR System

This system comprises of Eco-friendly & long-lasting Ceramic Membranes. Ceramic MBR system operates at low operational flux and easy to clean as the membrane is rigid and do not lose its form over a period of time. The system can be cleaned with Permeate & Chemically Enhanced Backwash technology and Air scouring to avoid sludge deposition. The sprinkler pumps ensures that there is no clogging over the membrane surface.

3.2. CONTAMINANT REMOVAL SYSTEM

Contaminant Removal system reduces the circulation of inorganic compounds in biological oxidation system. These compounds can be removed from the membrane surface by backwashing and the drained water has to be treated before being fed back to the biological oxidation system. Where it does not settle at the biological process and the repeated circulation of these compounds in biological feed stream will decrease the efficiency of biological oxidation system so this inorganic compound will completely remove via Contaminant Removal System

3.3. DEGASSER TOWER SYSTEM

Degasser tower eliminates the carbonaceous gases from the effluent water by means of a packed decarbonizing tower. The air blown from the bottom of the tower carries away CO_2 from wastewater to the top of the tower to reduce the dissolved gases and there by protect the RO membranes from scaling

3.4. REVERSE OSMOSIS SYSTEM

Reverse Osmosis Process is the forced passage of water through a membrane against the natural osmotic pressure to accomplish separation of ions and water. It separates the dissolved salts from the feed water and reduces the TDS level, and this can be reused for industrial process. We can achieve lowest CAPEX and OPEX.

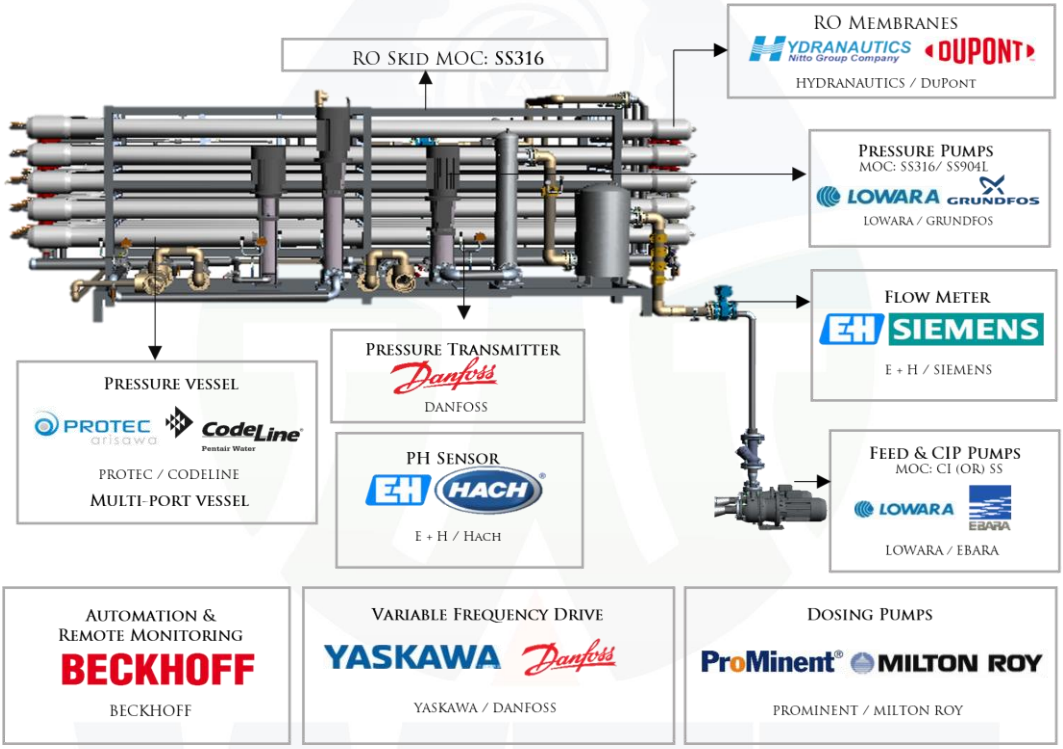

4. EQUIPMENT SCOPE OF SUPPLY – BY WTT

PLANT EQUIPMENT LIST			
A	**SUBMERGED CERAMIC MBR SYSTEM**		**7200 M^3/DAY**
S.NO	**DESCRIPTION**	**SPECIFICATION**	**QUANTITY**
1.	SUBMERGED CERAMIC MBR SYSTEM	NO. OF MODULES	1 LOT
		NO. OF TRAINS	3
		MOC OF MODULE	CERAMIC
		PERMEATE PUMP	3W + 1SS
		PUMP MOC (CASING/IMPELLER)	CI / CI

		TYPE OF PUMP	SURFACE MOUNTED
		BACKWASH/CIP PUMP	1W + 1S
		PUMP MOC (CASING/IMPELLER)	CI / CI
		TYPE OF PUMP	SURFACE MOUNTED
		SLUDGE TRANSFER PUMP	1W + 1S
		PUMP MOC (CASING/IMPELLER)	CI / CI
		PUMP TYPE	SURFACE MOUNTED
		DOSING PUMP	2W
		DOSING PUMP MOC	PP
		TURBIDITY SENSOR	PERMEATE
		ELECTROMAGNETIC FLOW METER	PERMEATE

B	CONTAMINANTS REMOVAL SYSTEM		720 M^3/DAY
S.NO	**DESCRIPTION**	**SPECIFICATION**	**QUANTITY**
2.	CONTAMINANTS REMOVAL SYSTEM	LAMELLA SETTLER	1 LOT
		LAMELLA PACKS MOC	PVC
		ANGLE OF INCLINATION FR PACKS	55 – 60°
		LAMELLA SETTLER FRAME MOC	SS316
		DOSING PUMP	1W + 1SS
		DOSING PUMP DIAPHRAGM MOC	PP

C	DEGASSER TOWER		2298 M^3/DAY
S.NO	**DESCRIPTION**	**SPECIFICATION**	**QUANTITY**
3.	DEGASSER TOWER	DEGASSER TOWER VESSEL	1
		TOWER MOC	FRP
		pH SENSOR	1 No

		DEGASSER TOWER MEDIA	1 LOT
		MEDIA MOC	PP
		DEGASSER TOWER BLOWER FAN	1
		DOSING PUMP FOR DEGASSER TOWER	1W + 1SS
		PUMPS MOC	PP / TEFLON

D	REVERSE OSMOSIS SYSTEM		2298 M^3/DAY
S.NO	DESCRIPTION	QUANTITY	QUANTITY
4.	REVERSE OSMOSIS SKID	**TOTAL NUMBER OF SKIDS**	1
		SKID MOC	SS316
		NUMBER OF STAGES	4
		RO FEED PUMP	1W + 1S
		PUMP MOC (CASING/IMPELLER)	CI / CI
		PUMP TYPE	SURFACE MOUNTED
		PRE-FILTER	1 LOT
		PRE-FILTER HOUSING MOC	SS316
		DOSING PUMPS	3W + 1SS
		DOSING PUMPS MOC	PP
		DOSING TANKS	2
		DOSING TANK MOC	LDPE
		HIGH PRESSURE PUMP WITH INVERTER	1W
		HIGH PRESSURE PUMP MOC	SS316
		HIGH PRESSURE PUMP TYPE	VERTICAL/MULTISTAGE
		BOOSTER PUMPS WITH INVERTER	3W
		BOOSTER PUMPS MOC	SS316
		BOOSTER PUMP TYPE	VERTICAL/MULTISTAGE

		PRESSURE VESSELS	30 No's
		PRESSURE VESSELS MOC	FRP
		RO MEMBRANES	180 No's
		RO MEMBRANES MOC	COMPOSITE POLYAMIDE
		pH SENSOR	1
		PRESSURE INDICATOR	10
		PRESSURE TRANSMITTER	10
		ELECTROMAGNETIC FLOWMETER	5 No's (RO FEED, EACH STAGE PERMEATE LINE)
		CIP DOUBLE SKID WITH AUTOMATION (INCLUSIVE OF PUMPS WITH ITS FILTER, pH SENSOR, FLOWMETER, PRESSURE TRANSMITTER, AUTO VALVES & DOSING PUMPS)	1 SET

W – Working; S – Standby; SS – Store Standby

Specification and quantity details mentioned above are preliminary and may be revised to optimize the performance of the system.

OTHER GENERAL ITEMS IN WTT's SCOPE:

- *Piping in SS, CPVC, UPVC and its associated items*
- *All other related valves and puddle flanges required*
- *Electrical control panel for proposed system with standard automation*
- *Power cable and control cable within the electrical panel*
- *Power cable and control cable from electrical panel to proposed equipment*
- *General layout & civil detailed drawing for proposed system*

5. Scope Of Supply & Installation - By Client

- Installation of supplied Equipment
- Transfer of Effluent up to proposed MBR system
- Bulk chemical storage tanks for (with fume absorber for acid tanks) proposed systems based on the available optimum level of chemical procurement
- Backwash/CIP Tank (RCC) for Proposed MBR system
- Raw / Permeate water transfer for cleaning of filtration Plant
- Raw water supply for whole plant
- Sludge handling for proposed systems
- Air scouring for proposed Submerged Ceramic MBR system
- Air conditioning Systems for Panel room & Personal Computers
- RO Reject & Permeate Water Transfer and handling
- Incomer cable and its connections with WTT supplied electrical panel
- Two Separate & Distinct Earthing for all individual equipment & panel
- Instruments/Electronics Earthing & Safety/Protective Earthing shall be provided for individual Instruments, Motor/Pump & Other Electrical Equipment
- Input power to individual WTT supplied electrical panel
- All civil related works, civil structural drawings, underground piping & piping for electrical cabling during civil works
- All loading & unloading @ site
- All excavation works related with pipe and cables laying
- Electrical cable & stabilized power supply until WTT panel's, Internal Individual Earthing as per requirement
- Utilities like Power, Steam, Welding gas, Hot water etc., if Required
- Chemical supply for proposed plant
- Separate panel, wiring with fans & lights for whole plant & its power supply
- Pre-Shipment Inspection requested by the local authorities
- All license fees and / or custom duties
- Provide Food, Accommodation and Local transport to the team of WTT
- Installation consumables (such as welding electrodes, cutting disk and others)
- Supply and assembly of all drainage lines for rain water, sewers, etc

- Any construction approval from local Authorities
- Supply of any hoisting and/or laying equipment (cranes forklift, etc.) both truck mounted or not
- Construction of site fencing/railing
- Protection for all field instruments, local switches, motors, etc.,
- Safety handrails for all tanks, safety items like life buoy rings, eye washer, life-jackets, etc
- Removal of all residual debris after construction and thorough cleaning of all tanks before plant start-up
- General spares for supplied equipment
- Any further item not described in our offer

HIGHLIGHTS

- *Our scope of supplies is of **SS316L pipes for MBR pipe line, RO pipe line**, materials like UPVC are used only in areas where SS316L is not compatible.*
- *Submerged CERAMIC MBR system with a **higher membrane life** and auto cleaning capabilities*
- ***Rapid Filtration & Backwash Sequence** with automatic valves for pre-filtration*
- ***Individual pressure transmitters for Inlet & Outlet** of each stage in RO to know exactly where the fouling has occurred and to initiate cleaning for that specific stage.*
- *Each stage of **RO permeate has individual EMFM** for better control and better automation to keep efficiency and life of RO.*
- ***STATE OF ART 2 SKIDS of CIP system** for Main RO with full automation including dosing of chemicals with pH automation and flow with pressure control.*
- *Electrical panel supplied by WTT with necessary cooling technologies and easy operative switch for Automatic & Manual operations.*
- ***PC controlled HMI panel** provided with complete automation and acknowledgement & warnings for cleaning necessities based on the operating conditions.*

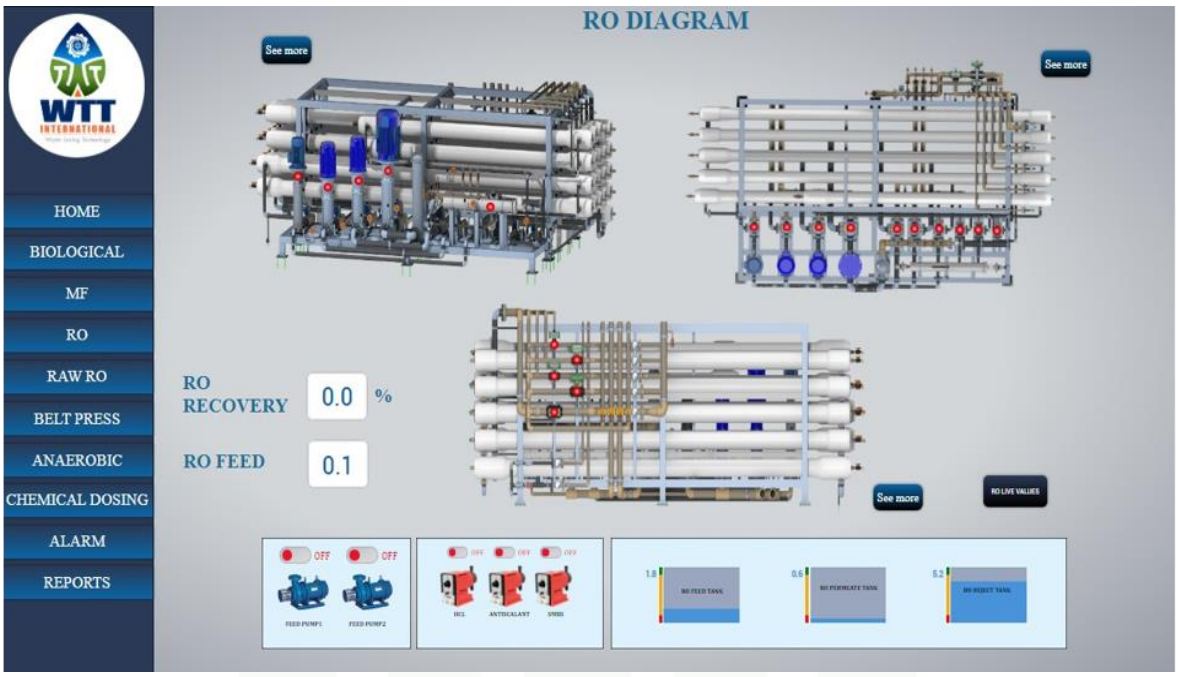

Sample of our HMI screens and is a tentative reference

- *Making the plant In-hand through **SCADA** for Live Data monitoring using a smartphone (or) PC.*

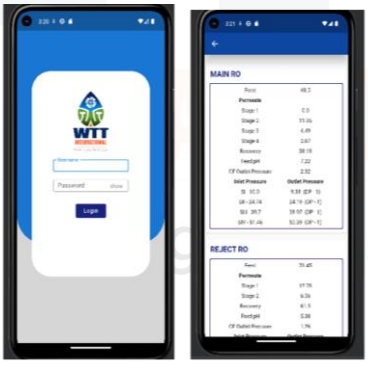

REMOTE DATA MONITORING

6. Typical Equipment Vendor List

S.NO	EQUIPMENT	VENDORS	COUNTRY OF MANUFACTURING
1.	PRESSURE PUMP	GRUNDFOS / LOWARA	DENMARK/CHINA
2.	SURFACE MOUNTED PUMP	EBARA / LOWARA	JAPAN/ITALY
3.	DOSING PUMP	PROMINENT / MILTON ROY	INDIA (ORIGIN-USA)
4.	CERAMIC MBR MEMBRANES	OVIVO	DENMARK
5.	RO MEMBRANES	HYDRANAUTICS / DUPOINT	JAPAN
6.	PRESSURE VESSELS	CODELINE / PROTEC	SPAIN
7.	VARIABLE FREQUENCY DRIVE	YASKAWA / DANFOSS	MANUFACTURING JAPAN (ASSEMBLED IN INDIA)
8.	ELECTROMAGNETIC FLOWMETER	E+H / SIEMENS	GERMANY/INDIA
9.	INLINE ANALYZERS	E+H / HACH / PROMINENT	GERMANY/INDIA
10.	LEVEL TRANSMITTER	E+H / SIEMENS / VEGA	GERMANY/INDIA
11.	LEVEL FLOAT	FAES	ITALY
12.	PRESSURE TRANSMITTER	DANFOSS	CHINA, ENGLAND & GERMANY
13.	PRESSURE GAUGE	FORBES MARSHALL / MASS / WIKA	INDIA
14.	AUTOMATION	BECKHOFF	GERMANY
15.	ELECTRICAL PANEL	RITTAL / HOFFMAN	INDIA (ORIGIN-GERMANY)
16.	ELECTRICAL CABLE	LAPP / HUBER+SUHNER	INDIA (ORIGIN-GERMANY)
17.	CONTAMINANTS REMOVAL SYSTEM	**WTT INTERNATIONAL**	INDIA
18.	DEGASSER TOWER		
19.	RO SKID		

The above-mentioned vendors are subjected to change based on the delivery terms for an equivalent vendor without compromising the quality and WTT reserves the right to change the vendor without any prior intimation

7. Pricing Detail

PRICE FOR PROPOSED SYSTEMS		
S.NO	**SYSTEM/EQUIPMENT**	**PRICE IN USD**
1.	**SUBMERGED CERAMIC MBR** WITH CONTAMINANTS REMOVAL SYSTEM- **7200 M^3/DAY**	**$ 3,664,904**
2.	**DEGASSER TOWER SYSTEM – 2298 M^3/DAY**	**$ 48,906**
3.	REVERSE OSMOSIS SYSTEM (**93% RECOVERY** IN 4 STAGES) **– 2298 M^3/DAY**	**$ 729,773**
TOTAL PRICE FOR PROPOSED SYSTEMS		**$ 4,443,583**

S.NO	OPTIONAL PRICE FOR PROPOSED SYSTEM	PRICE IN USD
1.	**RO HIGH PRESSURE PUMP - STORE STANDBY FOR ALL 4 STAGES**	**$ 38,110**

All above mentioned prices given for the proposed systems with complete automation.

- Pricing provided herein does not include any duties and taxes
- Pricing provided herein is on **EX-Works** basis & does not include the freight/insurance charges
- Supervision of erection and commissioning of WTT supplied system shall be extra
- Payment/commercial terms & conditions as per WTT's General Terms & Conditions of sale
- Price valid for 15 days from the date of proposal due to market volatility

8. Happy Customers

WELSPUN
JCT LIMITED
SIDDHI Group
NSL TEXTILES
Sharadha TERRY PRODUCTS LTD
BHILWARA GROUP
KPR MILL LIMITED
Kanchan
TRIDENTGROUP
Vardhmän
BEST
KITEX
Sona
SKT
BIRLA CENTURY
Himatsingka
premier
GANGA Acrowools
NAHAR INDUSTRIAL ENTERPRISES LIMITED
rdl RSL Dyecot Private Lmited
NUMALIGARH REFINERY LIMITED
NRL
silk park kanchipuram
Ministry of Textile
Government of India & Government of Tamilnadu

AND 12 CETPs ACROSS THE COUNTRY

9. Channel Partners

HYDRANAUTICS Nitto Group Company
DUPONT
AsahiKASEI
KOCH MEMBRANE SYSTEMS
xylem Let's Solve Water
GRUNDFOS
ROBUSCHI
Atlas Copco
KAESER COMPRESSORS
Endress+Hauser People for Process Automation
HACH
ABB
SIEMENS
BECKHOFF
RITTAL
OTT GROUP

10. Process Description Video

11. Commercial Terms and Conditions

11.1. TAXES

Taxes and Duties shall be extra as applicable. Pricing provided herein does not include any taxes of destination country.

If Tax Exemption is applicable, customer has to provide a copy to WTT of any applicable tax exemption certificates as issued by an approved taxation authority for the specific project location. Without an approved tax exemption certificate received by WTT all submitted invoices will include applicable tax. However we reserve the right to revise our price in case of tax exemption.

11.2. FREIGHT

All the Equipment and components foresee **Ex-works** delivery as per I.C.C. Incoterms-2010.

11.3. INVOICING AND PAYMENT TERMS

The pricing quoted in this proposal is based on the following payment terms, in principally agreed.

(1) 30% Advance Payment along with PO.

(2) 70% by irrevocable Letter of Credit payable at sight against Shipment documents.

Equipment shipment is contingent on receipt of earlier milestone payments.

11.4. EQUIPMENT SHIPMENT

Client and WTT will arrange a kick off meeting after contract acceptance to develop firm shipment schedule. This estimated delivery schedule assumes no more than 1 week for Client review of submittal drawings. Any delays in Client approvals or requested changes may result in additional charges and/or a delay to the schedule.

Material supply for the proposed plant in 7 - 8 months (approx.) is expected. The delivery schedule excludes the months of August & December, the delivery schedule is subject to review and adjustment. Partial shipments are allowed. In case of modifications to the volume of the supply after the emission of the order confirmation, WTT reserves the right to modify the delivery time and the agreed price.

11.5. FORCE MAJEURE

Please be advised that force majeure is applicable to the quotation provided. The unforeseen and uncontrollable events as defined in our terms and conditions, such as natural disasters, wars or pandemics & other events that prevent the parties from fulfilling their contractual commitments have occurred, impacting our ability to honor the terms outlined in this quotation. We will diligently review the situation and promptly communicate any necessary adjustments or potential delays in fulfilling the quoted services or products in compliance with the force majeure provisions outlined in our agreement.

11.6. PRICING NOTES

All prices are quoted in **USD**. Any applicable tax of destination country is not included. Client will pay all applicable Local, State / Provincial, or Federal taxes & Duties. WTT may manufacture and source the Equipment and any part thereof globally in the country or countries of its choosing, provided that the Equipment complies with all of the requirements specified in this Agreement.

The Equipment delivery date, start date, and date of commencement of operations are to be negotiated. Title and risk of loss will transfer upon delivery in accordance with the INCOTERMS 2010. Commercial Terms and Conditions shall be in accordance with WTT's General Terms and Conditions of Sale as included in Appendix.

12. CLIENT SCOPE OF SUPPLY

12.1. SAFETY AND ENVIRONMENTAL

First aid, emergency medical response, eyewash & safety showers in the water treatment area. Chemical spill response, security & fire protection systems as per local codes. Environmental use and discharge permits for all chemicals at Client facility either listed in this document or proposed for use at a later date. Any special permits required for WTT's or Client employees to perform work related to the water treatment system at the facility. All site testing, including soil, ground and surface water, and air emissions, etc. Disposal of all solid & liquid waste from WTT's system including waste materials generated during construction, startup and operation.

Provide appropriate protection of the environment & local community, the health and safety of all workers and visitors at the site and the security of the facility. Provide safety

related equipment & services such as site security, fire systems, lifting equipment and its operation, fall protection, adequate floor grating, ventilation, and safe access to equipment & electrical systems areas.

Equipment and trained support personnel for any confined space entry required during equipment installation/startup/commissioning/servicing. For permit-required confined space entry, a qualified rescue team on stand-by and available to respond within 4 minutes of an emergency.

Client will identify and inform WTT's personnel of any hazards present in the work place that could impact the delivery of WTT's scope of supply and agrees to work with WTT to remove, monitor, and control the hazards to a practical level. Client will provide training to WTT's personnel on all relevant & standard company operating procedures and practices for performing work on site.

12.2. JOBSITE AND INSTALLATION REVIEW

Review of WTT's supplied equipment drawings and specifications. All easements, licenses and permits required by governmental or regulatory authorities in Connection with the supply, erection and operation of the system.

Overall plant design, detail drawings of all termination points where WTT's equipment or Materials tie into equipment or materials supplied by others Stamping, signing or Sealing General drawings as per State, or local regulations or codes. All applicable civil design and works, including any building, site preparation, grading, excavations, foundations and trenches and accessories.

All electrical Labor and supplies leading up to jobsite including fittings, conduit, supports, cable trays, wire and hardware, air-conditioning of panels required to appropriately ground / earth the equipment as required for installation and ongoing operations.

All mechanical Labor and supplies leading up to jobsite including interconnecting piping, heat tracing (if required), fittings, conduit, pipe supports, and hardware as required for installation and ongoing operations. All instrumentation and automatic pneumatic valves including but not limited to; air/sample line tubing, fittings, conduit, supports, isolating valves as required for installation and ongoing operations. Loading, unloading and transportation of

equipment, materials required for WTT to perform duties outlined in WTT's Scope of Supply to the jobsite and/or warehouse.

Client will provide all access structures (scaffolding), mechanical lifting equipment (cranes, forklifts, scissor lifts, etc.), suitable site/shelter for placement of the proposed equipment, either inside appropriate housing, or outdoors.

Precaution: electrical equipment including the PLC may require air-conditioned rooms to prevent overheating of sensitive electronic equipment depending on climatic conditions. Bulk chemical storage and tanks, including secondary containment in accordance with local codes. Client will receive, off-load, log, and store all chemical and materials in accordance with Manufacturer's recommendation that are shipped. Compressed instrument air for pneumatic valves instruments and ejector system Equipment anchor bolts, Laboratory services, operating and maintenance personnel during equipment checkout, start-up and operation. Any on-site painting or touch-up painting of equipment supplied. Disposal of any Preservative.

For erection, WTT will ship the accessories such as pipes, bolts, nuts, screws, cables, valves any other equipment or devices in excess quantities than required. This is in order to avoid shortages during the assembly due to damage or any other cause as it is difficult to procure the accessories locally. It is notified that all the shipped accessories during assembly and the excess accessories after commissioning are always remain the properties of WTT. WTT has the authority to retake the same at any period of time, even before and after commissioning. It is client's responsibility to preserve the above-mentioned items till WTT takes back the same.

12.3. START-UP AND COMMISSIONING

Installation & removal of temporary screens on all process lines Flushing and disinfection of all piping and tanks (including process equipment tanks) and verification of removal of all residual debris from construction. Alignments & required materials for rotating equipment MEG testing of all field motor power wiring (as required). Continuity checks for all electrical field wiring as per Installation Checklist, Hydro-testing of all field installed piping. Supply raw materials, oil/lubricants chemicals and utilities during start-up and operation.

Electrical & Mechanical support labor for commissioning activities, loading of membranes, stacks, modules, etc.

12.4. FACILITY MANAGEMENT

Client will provide such warehouse storage space and facilities, as are available at the site, and are reasonably appropriate to store parts, consumables, tools, etc. in accordance with manufacturer's recommendations. Such warehouse storage space will be a segregated area, secured and protected from adverse climate as may reasonably be required. The storage area shall be facilitated with 24 hours lock & key with security and Client will be responsible for risk of loss of WTT's parts while in storage at the site. Client will maintain WTT's parts stored at the site free & clear of any and all liens of Client and lenders, bondholders, contractors & other creditors of any nature.

Client will afford WTT's personnel free access and egress of the facility for all authorized work. Provide workshop facilities/area with roof and stabilized power supply, as is reasonably appropriate to carry out machining/fabrication works.

Provide adequate illumination and emergency lighting for all areas in which the WTT will be executing the scope of supply. Identify a Client project contact person to be available to WTT's personnel to address any issues related to WTT's execution of WTT's scope of work. Responsible for the equipment for movement of chemical drums, totes, and resins, as is reasonable. Provide all site utilities such as raw water, instrument quality air, potable water and power required for operation of the proposed equipment included in this scope of supply.

12.5. CONDITIONAL OFFERING

Client understands that this order confirmation has been issued based upon the information provided by Client and currently available to, WTT at the time of proposal issuance. Any changes or discrepancies in site conditions (including but not limited to system influent characteristics, changes in Environmental Health and Safety ("EH&S") conditions, and/or newly discovered EH&S concerns), Client financial standing, Client requirements, or any other relevant change, or discrepancy in, the factual basis upon which this proposal was created, may lead to changes in the offering, including but not limited to

changes in pricing, warranties, quoted specifications, or terms and conditions. WTT's offering in this proposal is conditioned upon a full WTT EH&S.

13. APPENDIX

13.1. APPENDIX A: CLARIFICATIONS

- Pump MOC has been considered as per WTT standard practice.
- The Equipment in WTT scope will be procured as per WTT Standard Vendor List.
- WTT has not envisaged third party equipment inspection before dispatch.
- The payments received once could not be processed again for refund.
- WTT has considered instruments as per WTT standard practice
- Painting specifications of WTT supplied equipment is as per standard manufacturer painting specifications.

13.2. APPENDIX B: ACCEPTANCE

To ensure accurate and prompt order entry, product delivery, billing and accounts receivables processing, please ensure your Purchase Order contains the complete Client and order details.

Please communicate your PO through:

E-mail	venkat@wttint.com
Postal Mail: (Indian Office)	WTT INTERNATIONAL PVT. LTD. No. 3, College cross road Avarangadu, Tiruppur, TamilNadu, INDIA – 641602

Bank Account details:

Beneficiary Name : WTT INTERNATIONAL PVT. LTD.,

Bank Name : INDIAN BANK LTD

Branch Name : TIRUPUR MSME BRANCH, TIRUPUR, TAMILNADU.

Account Number OD : 6475173650,

IFSC Code : IDIB000I043

13.3. APPENDIX C: WARRANTY

The mechanical warranty is only applicable to equipment supplied by WTT. The mechanical warranty period on all equipment supplied, unless otherwise noted, is twelve (12) months from the date of installation or fourteen (14) months from equipment shipment, whichever occurs first. WTT's obligation under this warranty is to the repair or replace, of any device or part thereof, which shall prove to have been manufacturing defects.

This warranty excludes the diffuser membranes, electrical items, defects, failures, damages or performance limitations caused in whole or in part by normal wear & tear, power failures, surges, fires, floods, snow, ice, lightning, excessive heat or cold, highly corrosive environments, accidents, actions of third parties, or other events outside of WTT's control. Warranty period for the entire equipment including replaced or repaired parts will be limited to the unexpired portion of the total warranty period. Bought out components are guaranteed only to the extent of guarantees given to us by our suppliers.

WTT assumes no liability for any damage to equipment caused by inadequate storage or handling as per manufacturer's recommendations in supplied technical literature, or by defective or sub-standard workmanship or materials provided by Client or any other third party responsible for handling, storing or installing the equipment. Client undertakes to give immediate notice to WTT if goods or performance appear defective and to provide WTT with reasonable time and opportunity to make inspections and tests. If WTT is not at fault, Client shall pay WTT the costs and expenses of the inspections and tests.

Goods shall not be returned to WTT without WTT's permission. WTT will provide Client with a "Return Goods Authorization" (RGA) number to use for returned goods. All return costs associated with shipping and labor are not included in the mechanical warranty. WTT warrants, subject to the provisions herein after set forth, that after stable operation of the WTT system has been attained and operators have acquired reasonable skills, the Equipment supplied for this project will be capable of producing the results set forth in stage wise parameter table, provided that:

The Equipment is operated and maintained at all times in accordance with the WTT Operations and Maintenance manual, The Equipment is operated within the mixed liquor characteristics defined in Influent quality table of this section, WTT has, until performance of its obligation herein is met, reasonable access to the Equipment and the operational data

relating thereto, Client furnishes adequate and competent operating, supervisory and maintenance staff, and necessary laboratory facilities with test equipment and personnel, Client utilizes the services of WTT until its performance obligations are met, Client supplies all necessary raw materials and services of a quantity and of a quality specified by WTT, An adequate and continuous power supply is available that will enable operation of all required equipment.